Product instructions(GD-5000)

1) Connection diagram

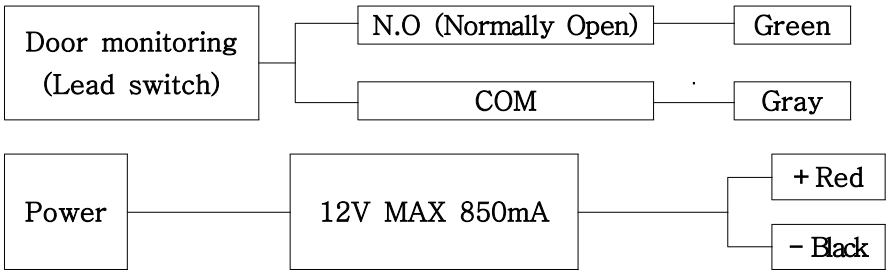

2) Specifications

Item		Spec
12 DCV	Voltage/Current	12DCV/850mA (Motion) 350mA (Hold)
	Allowable voltage range	9.6~15DCV
Door monitoring switch		COM,NO(Closed when the door is open) (Open when the door is open)
Door status detection range		within 15mm
(Locking monitoring S/W)		COM.NO.NC (Lock closed : NC) (Lock open : NO)

Door monitoring

Door status switch(Magnet)

Able to monitor door by contact switch (COM.NO.NC.)

Solenoid monitoring

Able to monitor deadbolt by contact switch(COM.NO.NC)

Low electric consumption

minimizes electric consumption when it's not used

Temperature inside doesn't go up even when it's used for a long time

3)Dimension
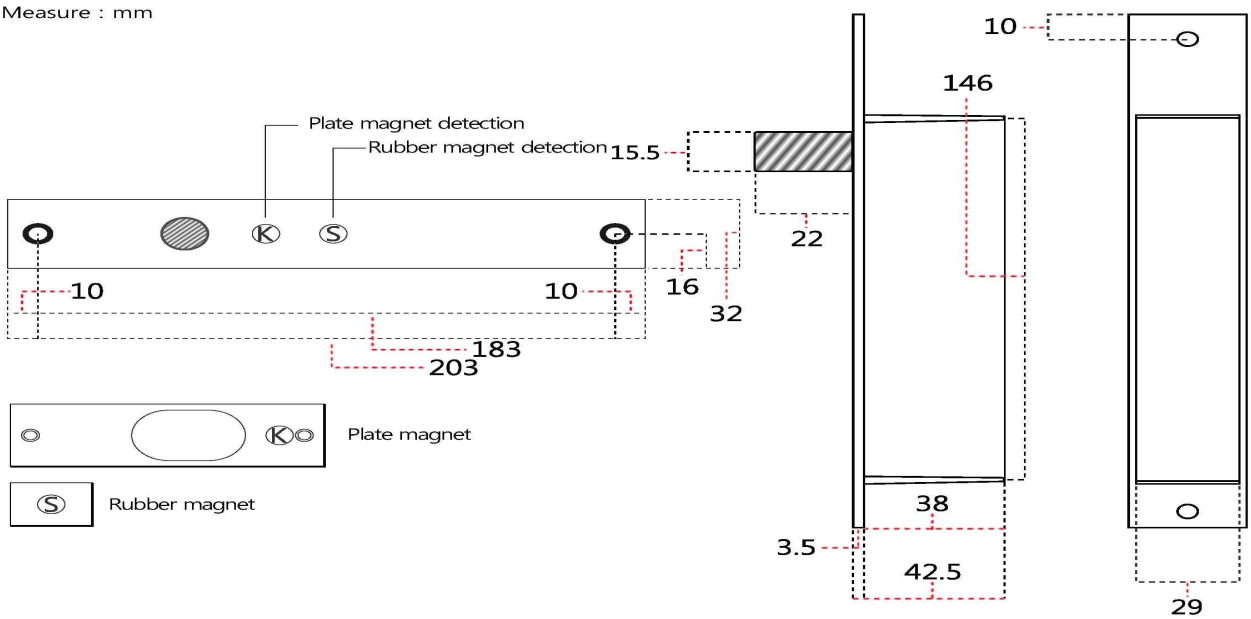
Measure : mm