Product Istructions(GS-2000)

1) Connection diagram

Door monitoring (Latch)

- N.C(Normally Closed) — Yellow
- COM — Purple
- N.O(Normally Open) — Brown

Locking monitoring(Strike)

- N.C(Normally Closed) — White
- COM — Orange
- N.O(Normally Open) — Gray

Voltage: 12V MAX 280mA

SOL — +Red, -Black

2) Fail Secure, Fail Safe

Fail Safe(Power to lock)

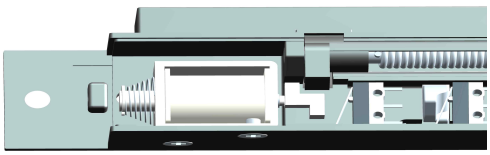

A factorysetting is power to open

Fail Secure(Power to open)

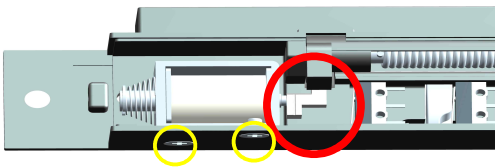

Unscerw the solenoid connection,
turn over like a rwd circle
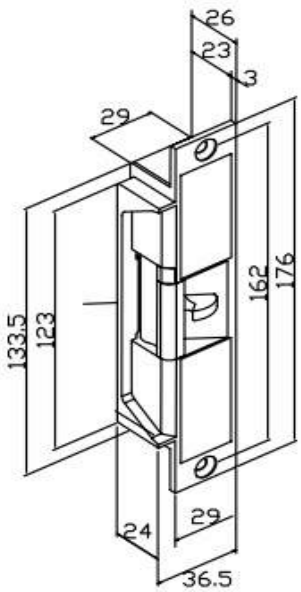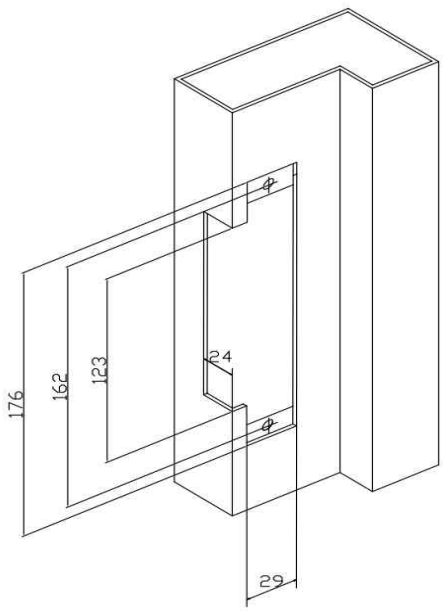
3) Dimensions